Double-Link Beam Load Cell

FEATURES

- Capacities: 50k to 100k lbs.
- Nickel-plated element
- Certified to OIML R60 3000d and NTEP class IIIL 10000 divisions
- Sealing: IP67 (DIN 40.050)
- Low profile, self-checking, and self-centering
- Optimized design specially for weigh-bridge use
- **Optional**
  - Conduit adapter
  - FM approved for use in potentially explosive atmospheres

APPLICATIONS

- Truck scales
- Railroad track scales
- "Legal-for-Trade" tank, bin and hopper weighing

DESCRIPTION

The 5223 is a hermetically sealed, end loaded, center supported double-ended shear beam.

This product is suitable for a wide range of truck and rail scales. It is designed to use parallel link loading, considered by many weighing experts to be advantageous when compared to other loading techniques.

Fully welded stainless steel seals ensure high environmental integrity and provided that additional cable sealing is used, occasional submersion can occur without damage.

These products meet the stringent Weights and Measures requirements throughout Europe.

OUTLINE DIMENSIONS in millimeters

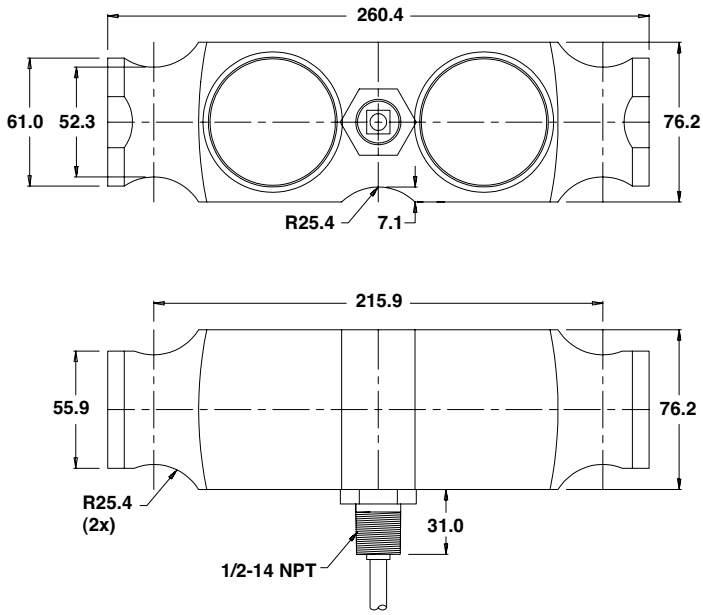

Cable specifications:

Cable length: 12m

+ Excitation	Red
– Excitation	Black
+ Output	Green
– Output	White
Shield	Transparent

Cable screen is not connected to load cell body. Performance may be affected if load cell cables are shortened.

Model 5223

Revere

VPG Transducers

Celtron • Revere • Sensortronics • Tedea-Huntleigh

Double-Link Beam Load Cell

SPECIFICATIONS				
PARAMETER	**VALUE**			**UNIT**
Standard capacities (E_{max})	50k, 65k, 100k			lbs.
Accuracy class according to OIML R-60 / NTEP	NTEP IIIL	Non-Approved	C3	
Max. no. of verfication intervals (n_{lc})	10000		3000	
Min. verification interval (V_{min})			E_{max}/10000	
Rated output (=S)	3			mV/V
Rated output tolerance	0.003			±mV/V
Zero balance	1.0			±% FSO
Combined error	0.0200	0.0300	0.0200	±% FSO
Non-repeatability	0.0100	0.0100	0.0100	±% FSO
Minimum dead load output return	0.0250	0.0300	0.0167	±% applied load
Creep error (30 minutes)		0.0300	0.0245	±% applied load
Creep error (20 minutes)	0.0027	0.0045		±% applied load
Temp. effect on min. dead load output	(0.0008)	0.0140	0.0070	±% FSO/5°C (/°F)
Temperature effect on sensitivity	(0.0010)	0.0070	0.0045	±% applied load/5°C(/°F)
Minimum dead load	0			% E_{max}
Maximum safe over load	150			% E_{max}
Ultimate over load	300			% E_{max}
Maximum safe side load	100			% E_{max}
Deflection at E_{max}	0.5 / 0.6 / 0.9			mm
Excitation voltage	5 to 18			V
Maximum excitation voltage	20			V
Input resistance	700±7			Ω
Output resistance	700±7			Ω
Insulation resistance	≥5000			MΩ
Compensated temperature range	–10 to +40			°C
Operating temperature range	–40 to +80			°C
Storage temperature range	–40 to +90			°C
Element material (DIN)	Nickel-plated alloy steel			
Sealing (DIN 40.050 / EN60.529)	IP67			

FSO—Full Scale Output

All specifications subject to change without notice.

Technical contact: vpgt.americas@vpgsensors.com, vpgt.asia@vpgsensors.com, and vpgt.emea@vpgsensors.com

Document No.: 11811
Revision: 17 Dec 2014

Disclaimer

ALL PRODUCTS, PRODUCT SPECIFICATIONS AND DATA ARE SUBJECT TO CHANGE WITHOUT NOTICE.

Vishay Precision Group, Inc., its affiliates, agents, and employees, and all persons acting on its or their behalf (collectively, "VPG"), disclaim any and all liability for any errors, inaccuracies or incompleteness contained herein or in any other disclosure relating to any product.

The product specifications do not expand or otherwise modify VPG's terms and conditions of purchase, including but not limited to, the warranty expressed therein.

VPG makes no warranty, representation or guarantee other than as set forth in the terms and conditions of purchase. **To the maximum extent permitted by applicable law, VPG disclaims (i) any and all liability arising out of the application or use of any product, (ii) any and all liability, including without limitation special, consequential or incidental damages, and (iii) any and all implied warranties, including warranties of fitness for particular purpose, non-infringement and merchantability.**

Information provided in datasheets and/or specifications may vary from actual results in different applications and performance may vary over time. Statements regarding the suitability of products for certain types of applications are based on VPG's knowledge of typical requirements that are often placed on VPG products. It is the customer's responsibility to validate that a particular product with the properties described in the product specification is suitable for use in a particular application. You should ensure you have the current version of the relevant information by contacting VPG prior to performing installation or use of the product, such as on our website at vpgsensors.com.

No license, express, implied, or otherwise, to any intellectual property rights is granted by this document, or by any conduct of VPG.

The products shown herein are not designed for use in life-saving or life-sustaining applications unless otherwise expressly indicated. Customers using or selling VPG products not expressly indicated for use in such applications do so entirely at their own risk and agree to fully indemnify VPG for any damages arising or resulting from such use or sale. Please contact authorized VPG personnel to obtain written terms and conditions regarding products designed for such applications.

Product names and markings noted herein may be trademarks of their respective owners.